STORAGE & TRANSPORT | SHELVING

EZ-MUV SHELF

Adjustable | Expandable | Durable

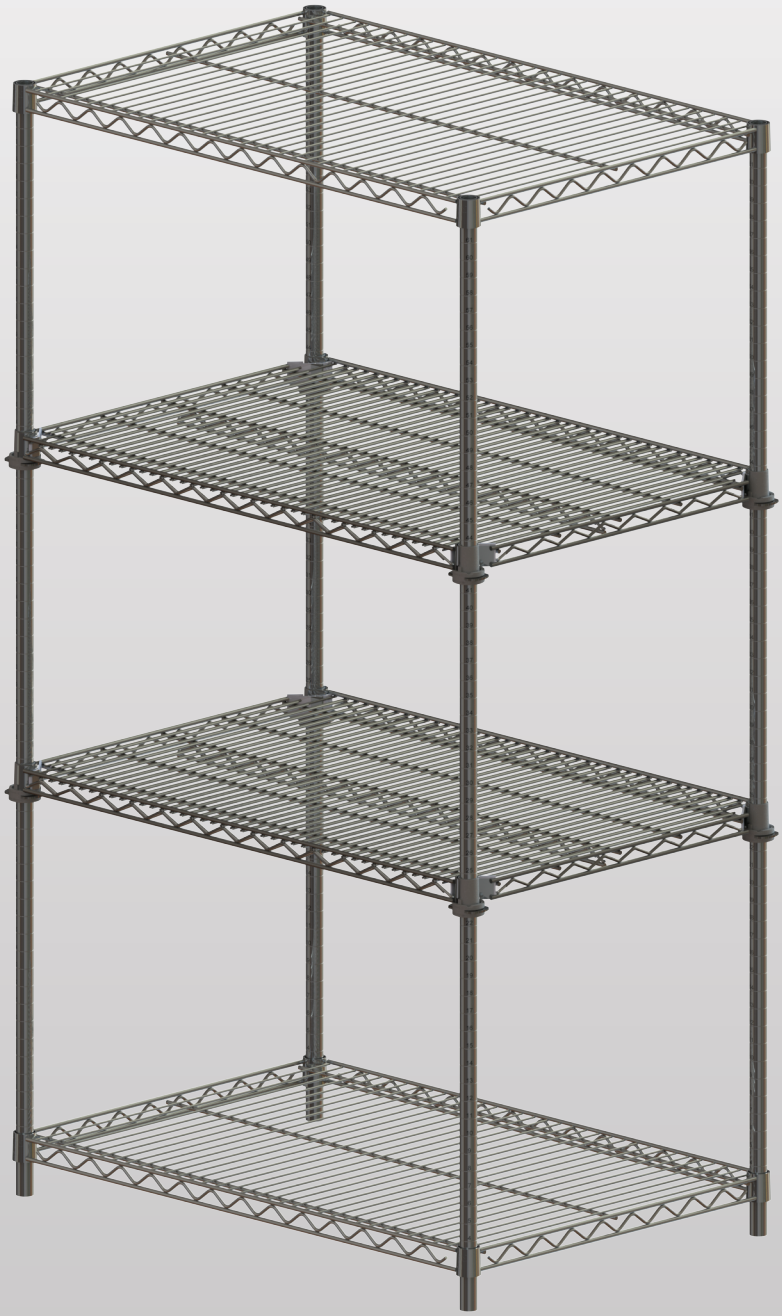

EZ-MUV Shelf

Introduction

Introducing our TSS EZ-MUV Shelf.
This shelf was designed especially to make quick and easy changes to your TSS shelving units.

- ***Built for strength and durability—up to 400 lb. capacity per shelf or 1600 lb. per unit.***
- ***Remove one shelf without removing all the shelves.***
- ***Minimum tools needed for assembly.***
- ***Interchangeable with current TSS shelving products.***
- ***Chrome is electro-plated nickel-chromed for a high gloss finish.***

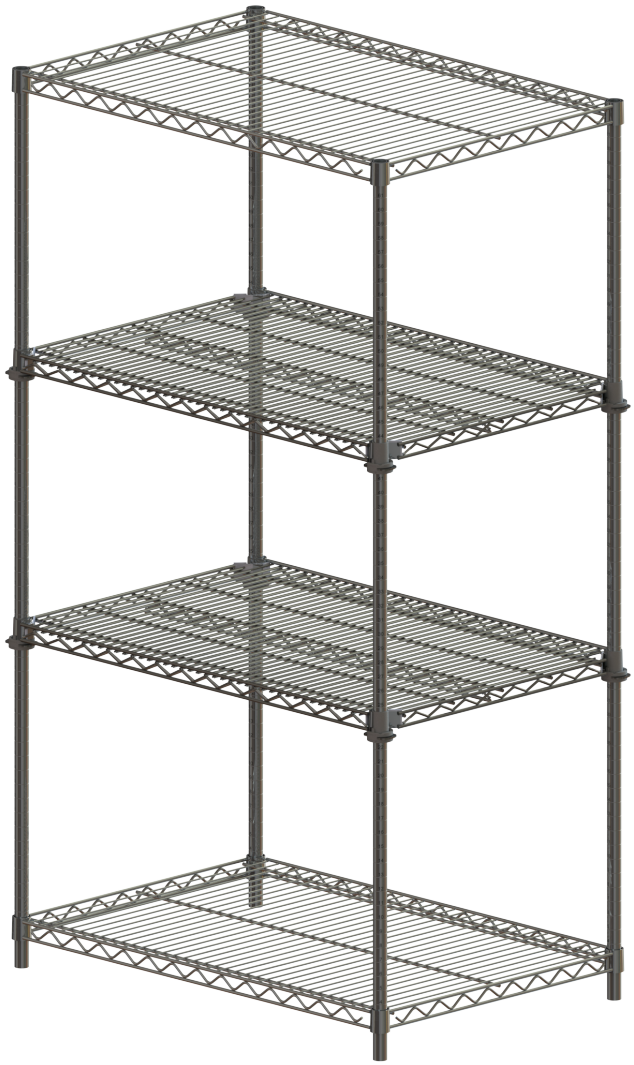

Easy Additions & Adjustments

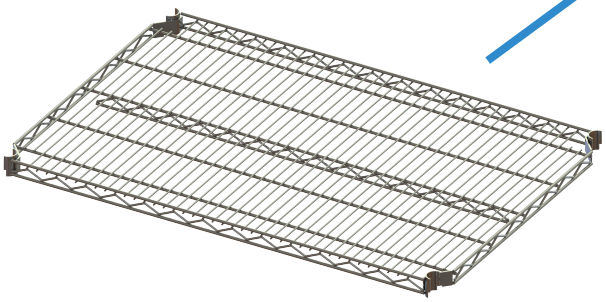

Available Shelf Sizes		
Part #	Dimensions (d x w)	Actual Dimensions (A x B)
EZ1836CH	18″ x 36″	18″ x 35.75″
EZ1848CH	18″ x 48″	18″ x 47.75″
EZ1860CH	18″ x 60″	18″ x 59.75″
EZ2436CH	24″ x 36″	24″ x 35.75″
EZ2436CH	24″ x 48″	24″ x 47.75″
EZ2460CH	24″ x 60″	24″ x 59.75″
EZCLIPS	1 complete set standard with each shelf ordered	

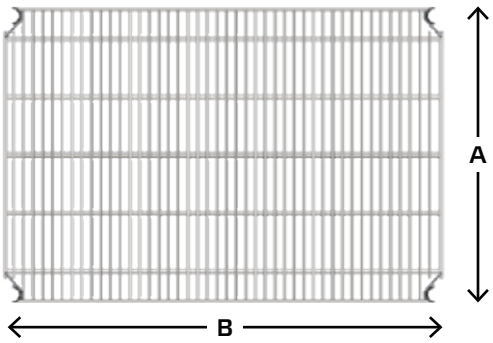

Features

EZ-MUV Makes Adjusting Shelves A Breeze

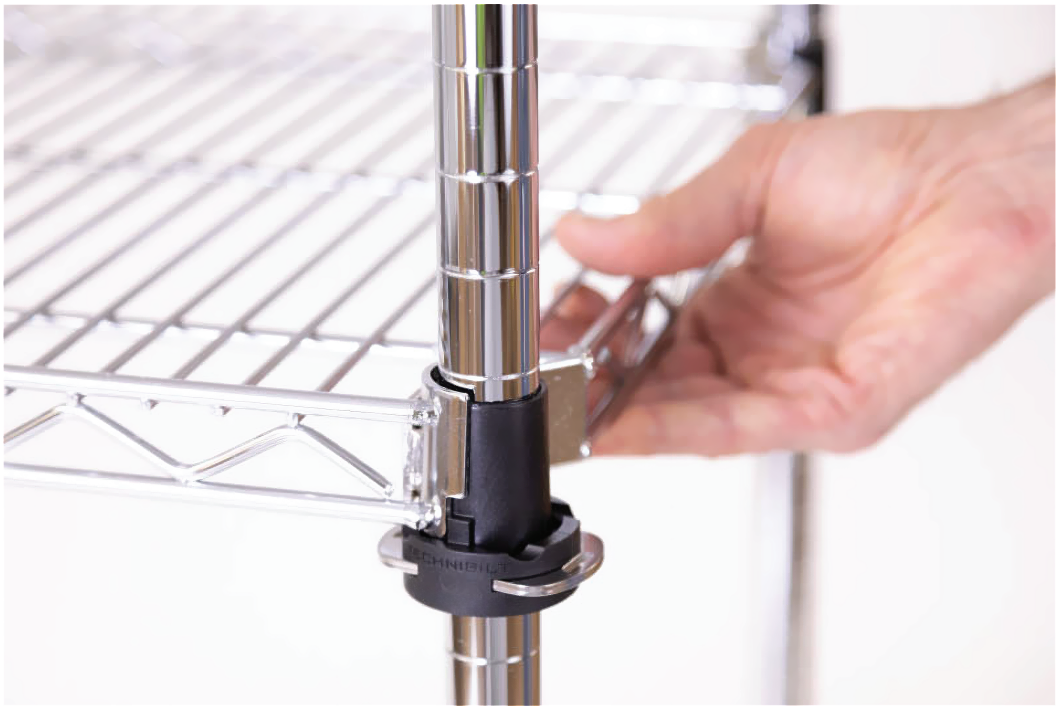

❶ Expanded Clip Halves and Staples

❷ Insert Staples into Clips

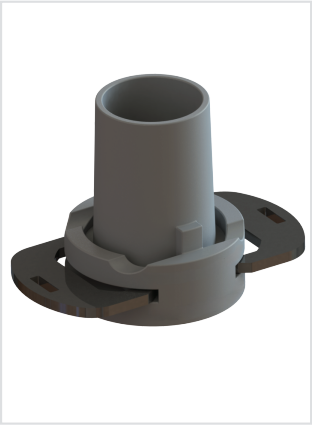

❸ Secured for Shelving

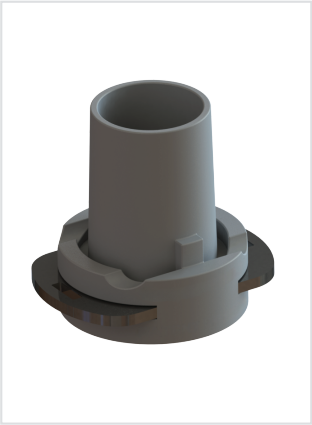

EZ-MUV Staple

EZ-MUV Clip Half

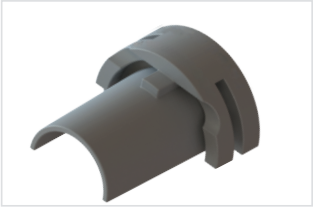

Note: *Shelf available in Chrome Finish only.*

Contact us for a quote.

Wanzl worldwide
- **Head Office**
- North America HQ
- Subsidiaries
- Partners

WANZL NORTH AMERICA
Wanzl NA Corporate Center
1019 Lincoln Commerce Ct
Denver, NC 28037

Phone +1 828-464-7388
Fax +1 800-968-8934

info-wna@wanzl.com
www.wanzl.com/na

GERMANY
Wanzl GmbH & Co. KGaA
Rudolf-Wanzl-Straße 4
89340 Leipheim

Phone +49 (0) 82 21 / 7 29-0
Fax +49 (0) 82 21 / 7 29-1000

info@wanzl.com
www.wanzl.com

Dimensions and specifications are approximate only. Colors are similar to RAL and/or PMS. Designs are subject to changes. Illustrations may show optional equipment and features.
© Wanzl North America 2020

1775 | 310724 | July 2020